Ice Machine Parts List for
S Series Ice Storage Bins Models

S170	**S400**
S320	**S570**
S420	**S970**

S SERIES STORAGE BINS

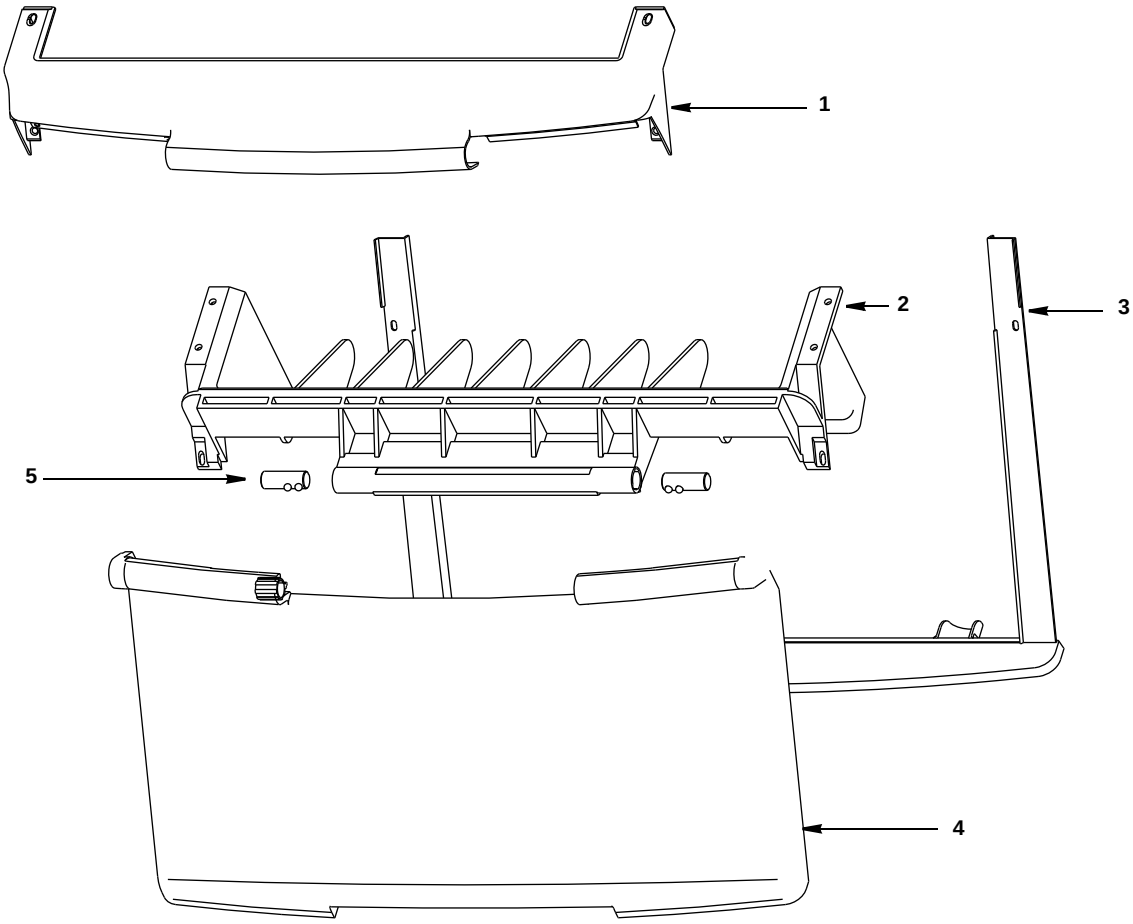

BINDORA

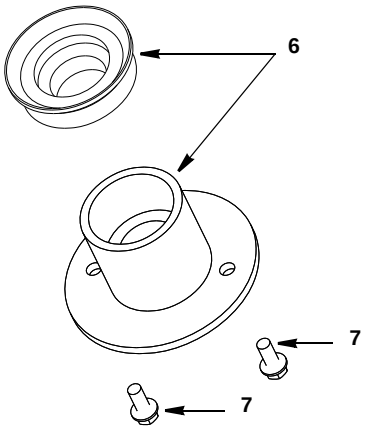

DRAIN

		PART NO.
S170 BIN		
1	Top Rail Trim	7628353
2	Ice Deflector	† 7628363
3	Door Opening Trim	7602523
4	Door (30 x 8.13)	† 7628383
5	Set of Left and Right Hinges	† 7629023
8	Bin Top Gasket Material (Not shown)	† 9202489
9	Drain Plug	4301171
S320/S420 BINS		
1	Top Rail Trim	7628403
2	Ice Deflector	† 7628413
3	Door Opening Trim	† 7602563
4	Door (22 x 16.19)	† 7628433
5	Set of Left and Right Hinges	† 7629023
6	Drain Seal Replacement Kit	7623223
7	Screw	† 5012319
8	Bin Top Gasket Material (Not shown)	† 9202489
S400 BIN		
1	Top Rail Trim	7628353
2	Ice Deflector	† 7628443
3	Door Opening Trim	† 7602593
4	Door (30 x 16.21)	† 7628453
5	Set of Left and Right Hinges	† 7628993
6	Drain Seal Replacement Kit	7623223
7	Screw	† 5012319
8	Bin Top Gasket Material (Not shown)	† 9202489
S570 BIN		
1	Top Rail Trim	7628353
2	Ice Deflector	† 7628443
3	Door Opening Trim	† 7602593
4	Door (30 x 16.21)	† 7628453
5	Set of Left and Right Hinges	† 7628993
6	Drain Seal Replacement Kit	7623223
7	Screw	† 5012319
8	Bin Top Gasket Material (Not shown)	† 9202489
S970 BIN		
1	Top Rail Trim	7628473
2	Ice Deflector	† 7628483
3	Door Opening Trim	† 7603383
4	Door (48 x 16.21)	† 7628503
5	Set of Left and Right Hinges	† 7628993
6	Drain Seal Replacement Kit	7623223
7	Screw	† 5012319
8	Bin Top Gasket Material (Not shown)	† 9202489

† Refer to Cross Reference Guide

INTENTIONALLY LEFT BLANK